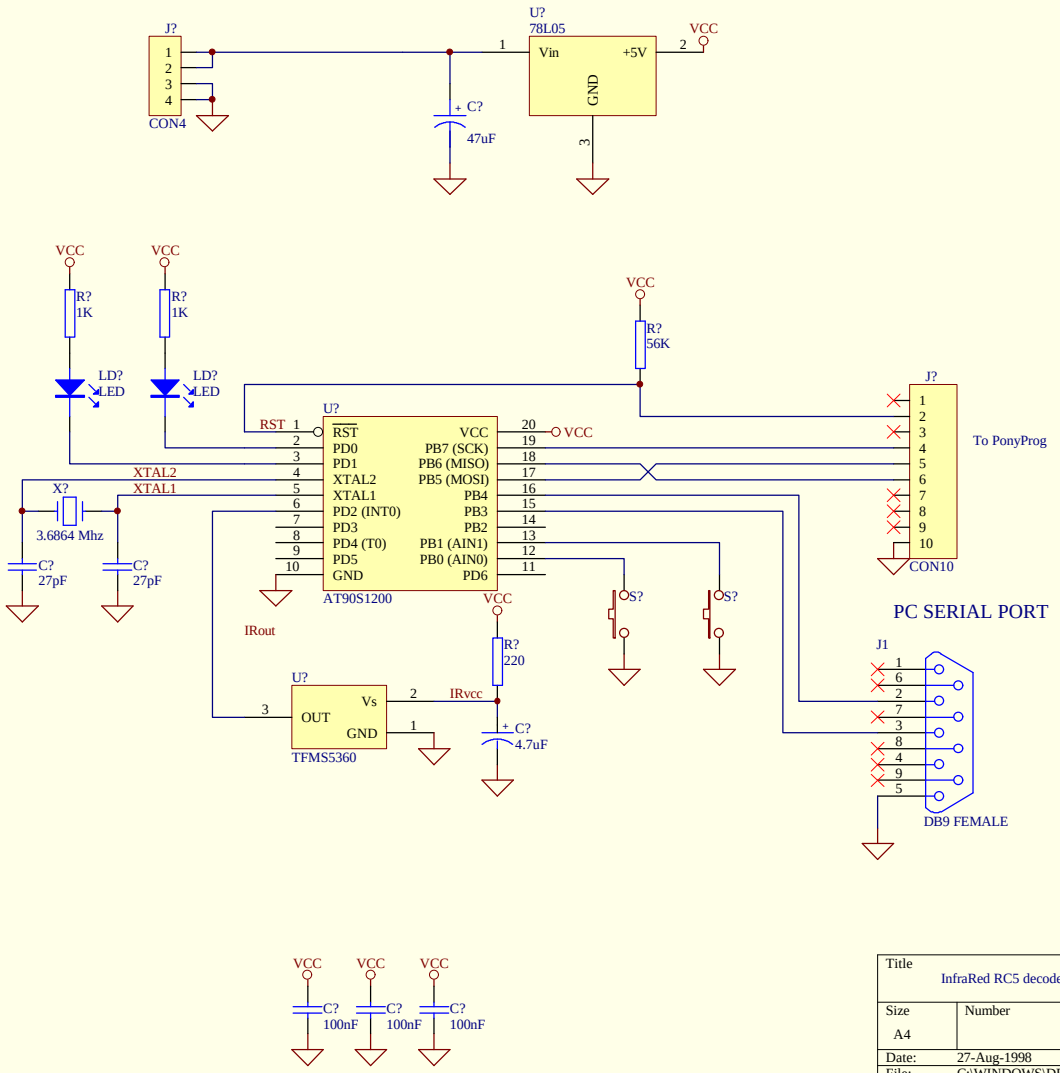

Title	InfraRed RC5 decoder	
Size A4	Number	Revision 1.00
Date: 27-Aug-1998		Sheet of
File: C:\WINDOWS\DESKTOP\IR-RC5.SCH		Drawn By: Claudio Lanconelli